GEM-FLOW™ | G75-S

Pilot Operated 1/2" 2 Way NC

Technical Data

Function	2 Way NC
Ports size	1/2" BSP & NPT
Orifice size	12mm
Pressure range	0.5 to 12 bar * Minimum pressure differential of 0.5 is required
Kv (l/min)	35 l/min
Temperature range	**Fluid:** 5ºC to 50ºC (no freezing) **Ambient:** -10ºC to 50ºC
Materials in contact with media	**Main Valve:** Plastic (Reinforced Nylon) **Solenoid Operator:** Stainless Steel AISI 300 & 400 series **Seals:** NBR, EPDM, FKM **Spring:** Stainless Steel AISI 300 series
Solenoid	G75 2W NC solenoids, all voltages.
Coil voltage	• Voltage and power consumption - see table • All Baccara coil voltages are ± 10% of nominal
Standard protection class	IP65



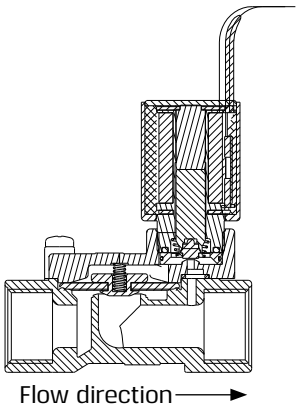

Voltage & Power Consumption

	AC (W) 50 Hz	DC (W)
V	2	4.5
12	•	•
24	•	•
110	• 2 Way only	

• Available options

Voltage & Current

AC & DC

Solenoid	Voltage	Inrush [A]	Holding [A]
2 Way 50 Hz	+10% n-20%	0.3	0.19
2 Way 60 Hz		0.2	0.14
3 Way 50/60 Hz *		0.125	0.125
3 Way NC 50Hz		0.6	0.36
3 Way NO 50Hz		0.53	0.36
DC		4.5W	

Latch Coil Resistance vs Input Voltage

Recommendations chart

Resistance [Ω]	Input voltage range [V]
4	6 - 9
9	12 - 14
12	14 - 16
23	18 - 21

GEM-FLOW™ | **G75-S** | Pilot Operated 1/2" 2 Way NC

Dimensions

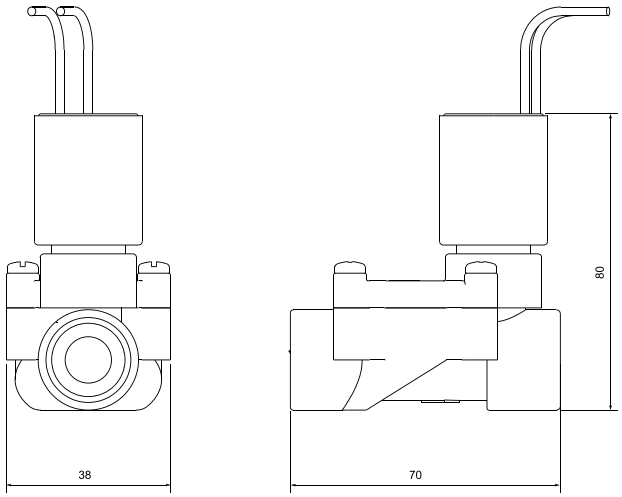

How to Order

W	-	BODY		PORT		FUNCTION		SEALS		MANUAL OVERRIDE		-	VOLTAGE [1]		WIRES	
		Plastic	4	1/2" BSP	40	2W NC	1	NBR	N	None	0		24V AC	1	two	null
				1/2" NPT	41			FKM	V				12V AC	3	three [2]	a
								EPDM	E				**12V DC**	4		
													24V DC	5		
													23Ω	6		
													110V AC	7		
													4Ω	B		
													9Ω	C		
													12Ω	D		

Example: G75-S-4401N0-1
GEM-FLOW™ G75-S pilot operated, 1/2" BSP, 2W NC, NBR, no manual override, 24V AC, two wires

(1) For Latch: Refer to Latch Coil Resistance vs Input Voltage | Recommendations chart
(2) For Latch only

* To order valves manufactured according to your specific requirements, please contact our technical sales department

GEM-FLOW™ | G75-S & G75-S2

Hydraulic 2 Way | G75-S: 3/4"-1" | G75-S2: 1-1/2"-2"

Technical Data

Function	2 Way
Ports size	3/4", 1", 1-1/2", 2" BSPT & NPT
Pressure range	**3/4", 1":** 0.4 to 10bar
	1-1/2", 2": 0.3 to 10bar
Temperature range	**Fluid:** 5ºC to 50ºC (no freezing)
Materials in contact with media	**Main Valve:** Plastic (Reinforced Nylon) **Diaphragm:** NR : 3/4", 1" EPDM : 1-1/2", 2" **Seals:** Buna - N **Spring:** Stainless Steel AISI 300 series



3/4"- 1"
with flow control



1-1/2"- 2"
with flow control

Head Loss for Fully Open Valve

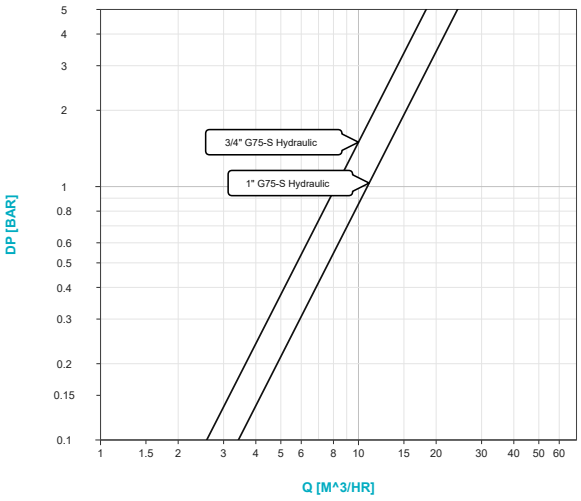

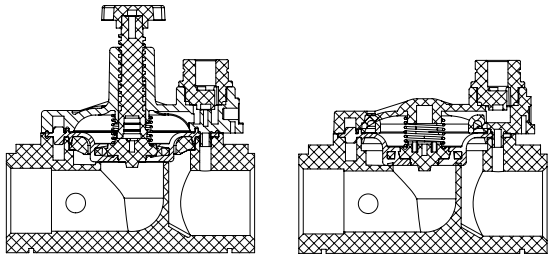

Flow direction →

with flow control

without flow control

Note:

For Electic valve below 0.6 m/s, an additional 0.3 bar should be added to the measured ΔP.

Head Loss for Fully Open Valve

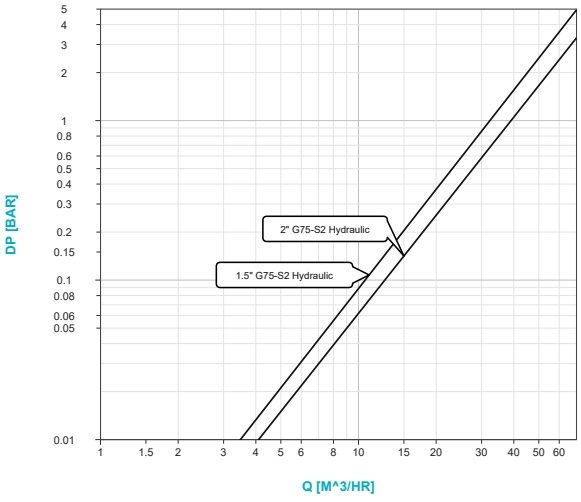

Note:

For Electic valve below 2 m/s , an additional 0.3 bar should be added to the measured ΔP.

GEM-FLOW™ | **G75-S & G75-S2** | Hydraulic 2 Way | **G75-S**: 3/4"-1" | **G75-S2**: 1-1/2"-2"

Dimensions

Size	A	B	C	D	E	ØG	Weight (gr.)
3/4"	105	110	77	81	52.5	1/8"NPT/BSP	230
1"	112	110	84	81	48.5	1/8"NPT/BSP	230
1-1/2"	177	145	121	127	89	1/4"NPT/BSP	780
2"	182	160	127	127	102	1/48"NPT/BSP	790

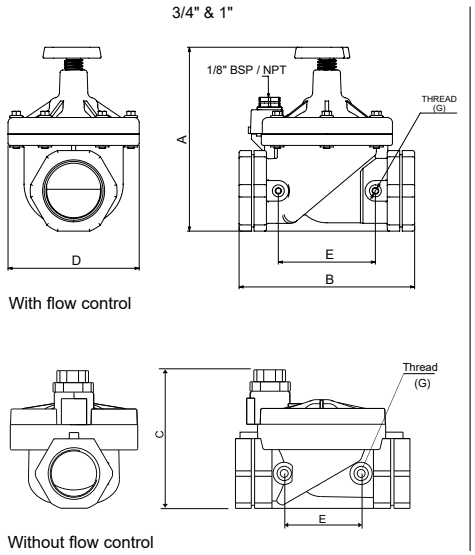

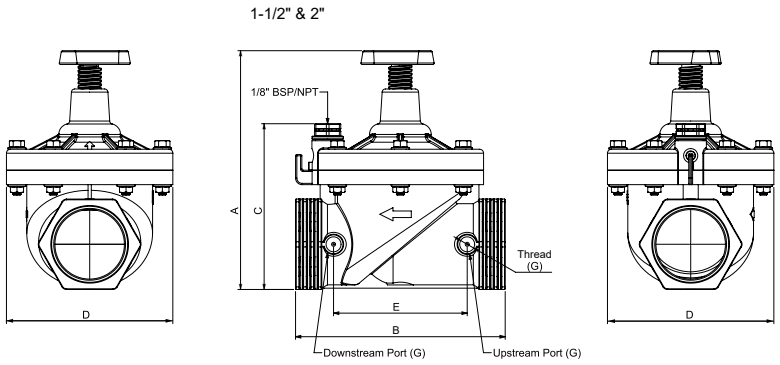

How to Order

G75-S	-	PORT		FUNCTION INLINE PILOT PORTS		FLOW CONTROL	
		3/4" BSPT	50	none	0	with	5
		3/4" NPT	51	upstream only	1	without	6
		1" BSPT	60	downstream only	2		
		1" NPT	61	both	3		

Example: G75-S-5015
GEM-FLOW™ G75-S Hydraulic valve, 3/4" BSPT, 1/8" upstream inline pilot port, with flow control

G75-S2	-	PORT		FUNCTION INLINE PILOT PORTS		FLOW CONTROL	
		1-1/2" BSPT	70	none	0	with	5
		1-1/2" NPT	71	upstream only	1		
		2" BSPT	80	downstream only	2		
		2" NPT	81	both	3		

Example: G75-S2-7015
GEM-FLOW™ G75-S2 Hydraulic valve, 1-1/2" BSPT, 1/8" upstream inline pilot port, with flow control

* To order valves manufactured according to your specific requirements, please contact our technical sales department

GEM-FLOW™ | G75-S & G75-S2

Electric 2 Way NC | G75-S: 3/4"-1" | G75-S2: 1-1/2"-2"

Technical Data

Function	2 Way NC
Ports size	3/4", 1", 1-1/2", 2" BSPT & NPT
Pressure range	**3/4", 1":** 0.4 to 10bar
	1-1/2", 2": 0.3 to 10bar
Temperature range	**Fluid:** 5ºC to 50ºC (no freezing) **Ambient:** -10ºC to 50ºC
Materials in contact with media	**Manual override:** Plastic (Reinforced Nylon) **Main Valve:** Plastic (Reinforced Nylon) **Solenoid Operator:** Stainless Steel AISI 300 & 400 series **Diaphragm:** NR : 3/4", 1" EPDM : 1-1/2", 2" **Seals:** NBR **Spring:** Stainless Steel AISI 300 series
Solenoid	• G75, 2W NC solenoids, all voltages. • AC, DC and Latch
Coil voltage	• Voltage and power consumption-see table • All Baccara coil voltages are ± 10% of nominal



G75-S | 3/4"-1" | NC with plastic manual override

G75-S2 | 1-1/2"-2" | NC with plastic manual override

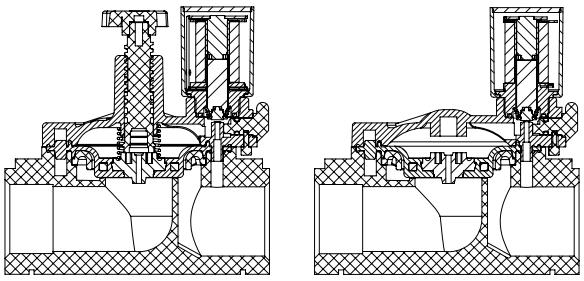

Flow direction →

with flow control

without flow control

Voltage & Current

AC & DC

Solenoid	Voltage	Inrush [A]	Holding [A]
2 Way 50 Hz	V +10% n-20%	0.3	0.19
2 Way 60 Hz		0.2	0.14
3 Way 50/60 Hz *		0.125	0.125
3 Way NC 50Hz		0.6	0.36
3 Way NO 50Hz		0.53	0.36
DC		4.5W	

Voltage & Power Consumption

	AC (W)	DC (W)
V	2	4.5
12	•	•
24	•	•
110	• 2 Way only	

Available options

- ● Standard
- ● Special

Head Loss for Fully Open Valve

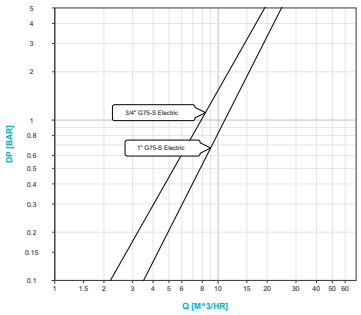

Note:

For Electic valve below 0.6 m/s, an additional 0.3 bar should be added to the measured ΔP.

Latch Coil Resistance vs Input Voltage

Recommendations chart

Resistance [Ω]	Input voltage range [V]
4	6 - 9
9	12 - 14
12	14 - 16
23	18 - 21

Head Loss for Fully Open Valve

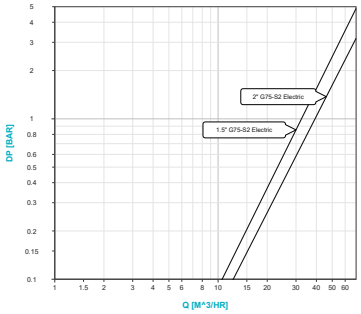

Note:

For Electic valve below 2 m/s , an additional 0.3 bar should be added to the measured ΔP.

GEM-FLOW™ | **G75-S & G75-S2** | Electric 2 Way NC | **G75-S**: 3/4"-1" | **G75-S2**: 1-1/2"-2"

Dimensions

Size	A	B	C	D	Weight (gr)
3/4"	105	110	105	81	230
1"	112	110	112	81	230
1-1/2"	177	145	146	127	865
2"	182	160	152	127	875

3/4" & 1" with integrated solenoid

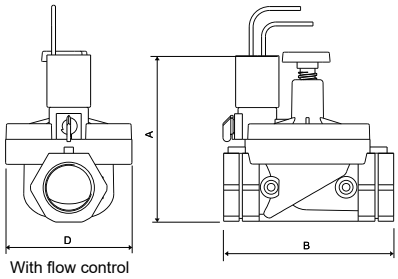

With flow control

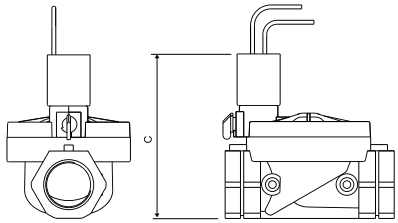

Without flow control

1-1/2" & 2" with integrated solenoid

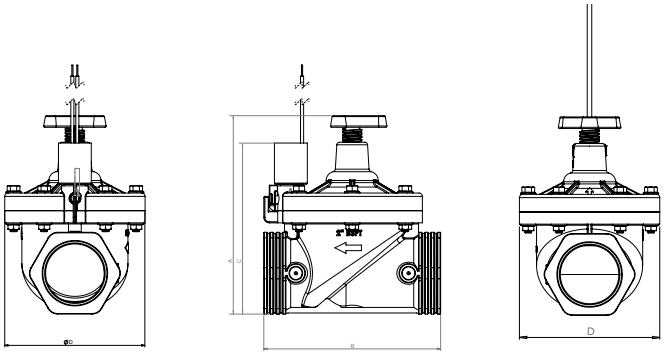

How to Order

G75-S	-	PORT		FUNCTION		MANUAL OVERRIDE		FLOW CONTROL		VOLTAGE [2]		WIRES	
		3/4" BSPT	50	2W NC	1	None	0	with	5	24V AC	1	two	null
		3/4" NPT	51			Plastic	1	without	6	**12V AC**	3	three [1]	a
		1" BSPT	60			Handle [1]	2			12V DC	4		
		1" NPT	61							24V DC	5		
										23Ω	6		
										110V AC* [3]	7		
										4Ω	B		
										9Ω	C		
										12Ω	D		

Example: G75-S-501051
GEM-FLOW™ G75-S electric valve, 3/4" BSPT, 2W NC, no manual override, with flow control, 24V AC, two wires

(1) For Latch only
(2) For Latch: Refer to Latch Coil Resistance vs Input Voltage | Recommendations chart
(3) 110V AC Available in 2W.

G75-S2	-	PORT		FUNCTION		MANUAL OVERRIDE		FLOW CONTROL		VOLTAGE [2]		WIRES	
		1-1/2" BSPT	70	2W NC	1	None	0	with	5	24V AC	1	two	null
		1-1/2" NPT	71			Plastic	1			**12V AC**	3	three [1]	a
		2" BSPT	80			Handle [1]	2			12V DC	4		
		2" NPT	81							24V DC	5		
										23Ω	6		
										110V AC* [3]	7		
										4Ω	B		
										9Ω	C		
										12Ω	D		

Example: G75-S2-701051
GEM-FLOW™ G75-S2 electric valve, 1-1/2" BSPT, 2W NC, no manual override, with flow control, 24V AC, two wires

(1) For Latch only
(2) For Latch: Refer to Latch Coil Resistance vs Input Voltage | Recommendations chart
(3) 110V AC Available in 2W.

* To order valves manufactured according to your specific requirements, please contact our technical sales department

GEM-FLOW™ | G75-S & G75-S2

3 Way Integral Solenoid Pilot Control 3/4" - 2" NC

Technical Data

Solenoid	Supplied with 3 Way NO 1.2mm G75 operator
Assembly	Upstream pilot control valve is supplied with finger filter and accessories

- For technical information, refer to G75-S & G75-S2 | Electric 3/4" - 2" 2 Way NC



Upstream pilot control



External pilot control

Voltage & Current

AC & DC

Solenoid	Voltage	Inrush [A]	Holding [A]
2 Way 50 Hz	V +10% n-20%	0.3	0.19
2 Way 60 Hz		0.2	0.14
3 Way 50/60 Hz *		0.125	0.125
3 Way NC 50Hz		0.6	0.36
3 Way NO 50Hz		0.53	0.36
DC		4.5W	

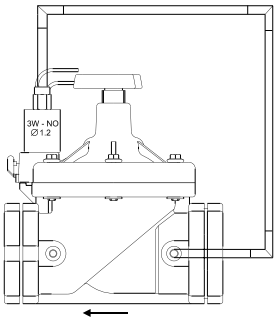

Upstream pilot control

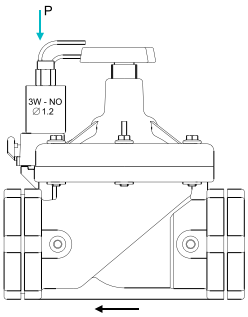

External pilot control

Voltage & Power Consumption

	AC (W)	DC (W)
V	2	4.5
12	•	•
24	•	•
110	• 2 Way only	

Available options

- Standard
- Special

Latch Coil Resistance vs Input Voltage

Recommendations chart

Resistance [Ω]	Input voltage range [V]
4	6 - 9
9	12 - 14
12	14 - 16
23	18 - 21

Head Loss for Fully Open Valve

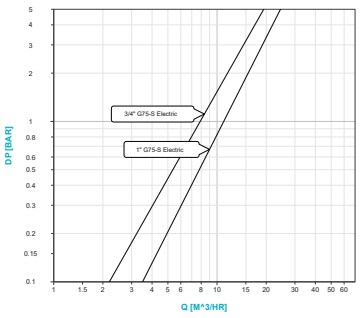

Note:

For Electic valve below 0.6 m/s, an additional 0.3 bar should be added to the measured ΔP.

Head Loss for Fully Open Valve

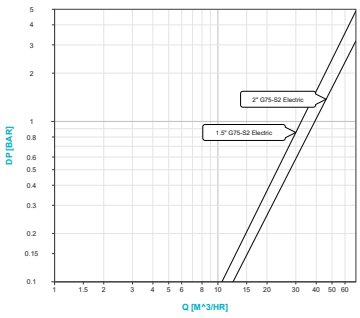

Note:

For Electic valve below 2 m/s , an additional 0.3 bar should be added to the measured ΔP.

GEM-FLOW™ | **G75-S & G75-S2** | 3 Way Integral Solenoid Pilot Control 3/4" - 2" NC

Dimensions

Size	A	B	C	D	Weight (gr)
3/4"	105	110	105	81	230
1"	112	110	112	81	230
1-1/2"	177	145	146	127	865
2"	182	160	152	127	875

3/4" & 1" with integrated solenoid

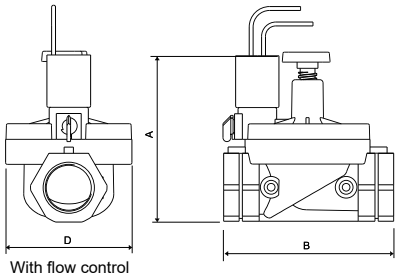

With flow control

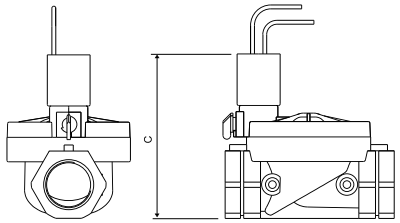

Without flow control

1-1/2" & 2" with integrated solenoid

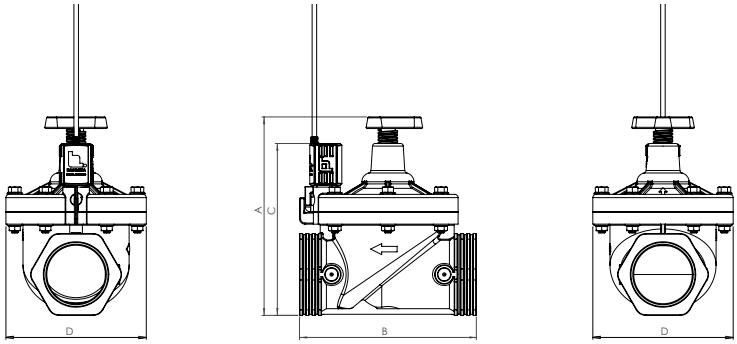

How to Order

G75-S	-	PORT		FUNCTION		MANUAL OVERRIDE		FLOW CONTROL		VOLTAGE [3]		WIRES	
		3/4" BSPT	50	External pilot	4	None	0	with	5	24V AC	1	two	null
		3/4" NPT	51	Upstream pilot	4H	Plastic	1	without[1]	6	24V AC w/out Diode	1R	three[2]	a
		1" BSPT	60			Handle[2]	2			**12 V AC**	3		
		1" NPT	61							12 V DC	4		
										24V DC	5		
										23Ω	6		
										4Ω	B		
										9Ω	C		
										12Ω	D		

Example: G75-S-704151
GEM-FLOW™ G75-S 1-1/2" BSPT, external pilot, plastic manual override, with flow control, 24V AC, two wires

G75-S2	-	PORT		FUNCTION		MANUAL OVERRIDE		FLOW CONTROL		VOLTAGE [3]		WIRES	
		1-1/2" BSPT	70	External pilot	4	None	0	with	5	24V AC	1	two	null
		1-1/2" NPT	71	Upstream pilot	4H	Plastic	1			24V AC w/out Diode	1R	three[2]	a
		2" BSPT	80			Handle[2]	2			**12 V AC**	3		
		2" NPT	81							12 V DC	4		
										24V DC	5		
										23Ω	6		
										4Ω	B		
										9Ω	C		
										12Ω	D		

Example: G75-S2-7015
GEM-FLOW™ G75-S2 Hydraulic valve, 1-1/2" BSPT, 1/8" upstream inline pilot port, with flow control

* To order valves manufactured according to your specific requirements, please contact our technical sales department