GEM-FLOW™ | G500-EL & G500-ELM

Electric Solenoid Control Valve 1-1/2" - 4"

Description

G500-EL model valve is the hydraulic control valve operated by line pressure and designed to ensure opening/closing process by means of built-in 3 Way solenoid pilot valve controlled remotely with electric signal*. Electric signal for solenoid pilot valve is ensured by means of a control device, time relay, main switch and PLC control units etc. Opening/Closing process may be realized easily thanks to manual control on solenoid pilot valve, depending on requirements, 24V AC 50Hz/60Hz or 12V DC, 9V Latch and 12V DC Latch normally open (NO) or normally closed (NC), solenoids coils may be used on main valve.

* For technical information, refer to G75-A and G75-A3P solenoid valves



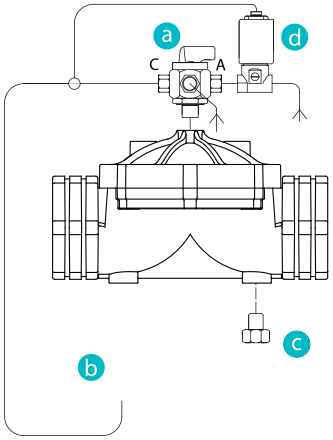

- **a** 3W selector valve
- **b** In-line finger filter
- **c** Plug
- **d** Solenoid Pilot Valve

Applications

- Use G500-EL to remove operation of hydraulic valve by an electric command
- Use G500-EL for water distribution

Standards

- G500-EL: 3 Way NO Solenoid, polyethylene plastic tubing system and nylon fittings
- G500-ELM: 3 Way NO Solenoid, polyethylene plastic tubing system, nylon fittings and 3 Way selector

How to Order

G500	-	TYPE		-	PORT		VOLTAGE		WIRES	
		Electric	EL		1-1/2" BSPT	70	No solenoid (hydraulic)	0	two	null
		with Manual Selector	ELM		1-1/2" NPT	71	24V AC	1	three (2)	a
					2" BSPT	80	24V AC w/out Diode	1R		
					2" NPT	81	**12V AC**	3		
					2-1/2" BSPT	85	12V DC	4		
					2-1/2" NPT	86	24V DC	5		
					3" BSPT	90	23Ω	6		
					3" NPT	91	4Ω	B		
					4" BSPT	100	9Ω	C		
					4" NPT	101	12Ω	D		
					4" Flange	100F	1Ω (1)	PA		
							4Ω (1)	PB		
							9Ω (1)	PC		

Example: G500-ELM-801
GEM-FLOW™ G500 Electric with manual selector, 2" BSPT, 24V AC, two wires

(1) For G75-A3P Latch
(2) For Latch only

* To order valves manufactured according to your specific requirements, please contact our technical sales department